V1

PROFESSIONAL
VERTICAL
AUTOSCRUBBER

FIMAP®
by YOR INTERNATIONAL

PROFESSIONAL
VERTICAL
AUTOSCRUBBER

V1 Professional Autoscrubber. The global solution to clean small and medium floors that fits any environment, space or cramped conditions

The machine opens up a new segment in the cleaning market.
Now you can have the power and performance of a conventional scrubber dryer in a small, nimble and manoeuvrable machine.
The era of PROFESSIONAL VERTICAL AUTOSCRUBBERS has begun.

V1 revolutionises the cleaning of small and medium surfaces, bringing the quality of professional cleaning where a conventional scrubber dryer cannot reach.

With V1 you get the high standard of hygiene that only a scrubber dryer can give you, even when space is narrowed by an irregular layout or the presence of obstacles.

With its exceptional flexibility there is nowhere it cannot go:
effortlessly you reach the most hidden corners and complete your cleaning task quickly and successfully.

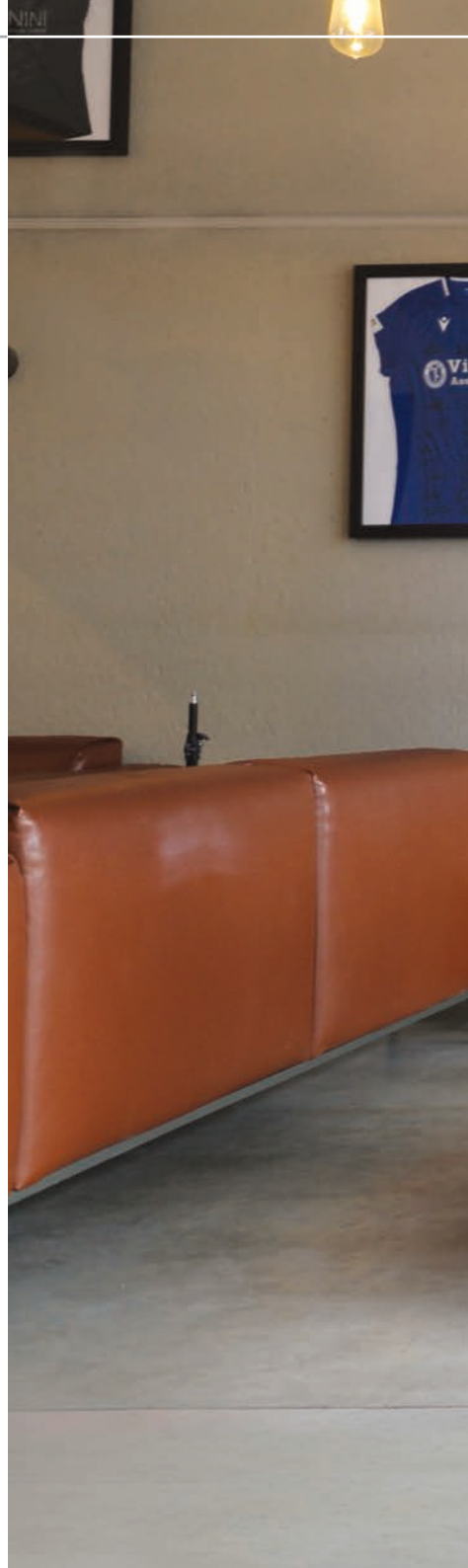

HYUNDAI
FIMAP

V1, made for professionals!

The ROBUSTNESS, RELIABILITY and POWER of a conventional scrubber dryer are engineered into a vertical design

Robust and reliable

- **ALL THE PLASTICS are highly resistant and shockproof**
- Stress-resistant **aluminium WEIGHTLESS JOINT**
- **MACHINE BODY AND SQUEEGEE** in corrosion resistant **ALUMINIUM**
- **BRUSHLESS BRUSH MOTORS**
  They are a perfect choice for their compact size and very advantageous, as they are **durable** and **maintenance-free,** and are more **efficient,** since they allow the full power output to be used, without dissipation.

Powerful

- **INTELLIGENT VACUUM MOTOR,** it autonomously adjusts to the amount of water to be collected, **decreasing the vacuum power when it is small and increasing it when it is larger,** optimising battery use so as to extend battery runtime.
- **350 rpm and 30 kg of BRUSH PRESSURE ON THE FLOOR** to tackle the most stubborn dirt and ensure a cleaning quality comparable to or even better than a conventional scrubber dryer.
- **ADJUSTABLE CLEANING POWER.** The amount of water and the vacuum power can be adjusted from the display so that the cleaning power can be changed when dealing with tougher dirt and avoid the need to perform a second cleaning.

With high operating time

- LITHIUM BATTERIES

  V1 is powered by a lithium battery
  that **delivers up to 2 hours of runtime*.**
  The battery is easy to replace; you can get more than one to alternate charges and always have V1 ready for use.
  Lithium batteries offer numerous advantages: no maintenance, long lifespan, and quick charges. They are lightweight and much more efficient than conventional batteries.

  The automatic vacuum motor adjustment helps preserve energy, thus increasing work autonomy.

- SOLUTION TANK

  With just 1 full tank of water, you can clean for 30 minutes and a floor of 700 sq.m

* Lithium battery (24V / 25 Ah)

PRO performance to tackle the most stubborn dirt

SHOCKPROOF PLASTIC

FLOAT AND FILTER

To protect the vacuum motor, just like in PRO scrubber dryers

1 FRESH WATER TANK

Up to 30 minutes of work with 1 full tank of water

7 DIRTY WATER RECOVERY TANK

Advanced vacuum technology

The exceptional vacuum power quickly collects the cleaning solution and any other liquid. The floor is clean and dry in one pass, and immediately safe to walk on.

2 FRESH WATER DISPENSING

The water dispensing, evenly distributed on the two brushes, ensures uniform floor cleaning

DIE-CAST ALUMINIUM JOINT

6 DIRTY WATER VACUUM HOSE

3

- Counter-rotating brushes at 350 rpm with Brushless motors
- Up to 30 kg of pressure on the floor

5 POWERFUL VACUUM MOTOR

To ensure optimal drying on the first pass

4 PARABOLIC SQUEEGEE

Corrosion resistant

ALUMINIUM FRAME BODY AND SQUEEGEE

All PRO functions shaped in a compact, vertical scrubber dryer

Cleaning modes for any requirement

1. PRE-CLEAN

To wet a particularly dirty area, performing a pre-cleaning action that softens the most stubborn dirt and enables a deeper cleaning

2. DRYING

To vacuum water from the pre-clean mode or accidentally spilled liquids

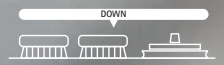

3. SCRUBBING AND DRYING

Floor scrubbing and drying in a single pass

4. ECO MODE

A water and energy saving mode suitable for cleaning lightly soiled floors

DIGITAL HOUR METER

It keeps you updated on usage times and helps you calculate the time needed for cleaning

Cleaning power adjustment

Water distribution and vacuum power can be adjusted separately and at any time during cleaning, according to actual needs

Service

A message on the display advises you when it is time for servicing

Lithium battery (24 V)

It's lightweight, compact and manages energy efficiently, ensuring seamless cleaning sessions

WEIGHTLESS technology

V1 is a professional machine that proves all its power and robustness in performance but does not strain the operator during use, thanks to the innovative WEIGHTLESS technology.

The core of the technology is the joint, which manages the machine's balance and supports its weight, so that no strain is felt during manoeuvring, even with a full water tank.
V1 can bend in any direction and achieve very tight turning radii, making it easy to reach the most challenging spots.

1. Eliminates effort

Ergonomics and manoeuvrability have been taken to the extreme to enable V1 to fulfil its purpose: to make it easy to clean the most difficult spots without any effort for the operator.

2. Stands upright on its own

If needed, the handle can be locked in the upright position using a lever on the grip. This allows V1 to stand on its own without requiring any additional support.

3. 2 modes of working

1. FIXED HANDLE

Conventional use, for FREE AREAS

The handle is fixed to move only forwards and backwards, down to a radius of 30°. The user can adjust the height according to their own and find the most comfortable posture for working without straining the back. The use is that of a conventional floor scrubber. It can cover up to 1500 sq.m/h.

2. FLEXIBLE HANDLE

The maximum flexibility, for CRAMPED SPACES

The handle is completely free and can perform any manoeuvre necessary to get around obstacles that clutter the area, bending sideways down to 45° to reach under tables. Maximum freedom of movement that does not fatigue during use is guaranteed by the **Weightless technology.**

You can switch from one working mode to another effortlessly, just like in a PRO!

QUICK-SQUEEGEE FOOT SWITCH FOR THE SQUEEGEE ACTIVATION

The **QUICK-SQUEEGEE** device enables the squeegee to be activated via a foot pedal. **This allows you to switch from one cleaning mode to another, such as from pre-clean to scrubbing and drying, without bending down or using your hands.** It is more hygienic, as it avoids hand contact with the dirty solution on the floor, and more comfortable, because it does not strain your back.

QUICK-TROLLEY

You can carry it everywhere like a travel trolley without any effort

V1 is perfect for cleaning small areas, but these are not always close to each other. That's why it features a trolley system with wheels placed at the support points, **allowing you to pull or push V1 like a trolley and easily take it where needed.**

It takes up little space for storage

When stored, V1 takes up only the space of the brush head. In the parking position, the front wheel keeps the brushes raised off the ground, preventing the bristles from warping.

It's immediately ready with the QUICK&SMART solutions

V1 can be prepared in just a few steps, thanks to the intelligent QUICK&SMART solutions designed for an absolutely user-friendly experience.

The ECO MODE function allows for immediate startup. Press a single button, and water and suction are automatically activated in a saving mode which reduces consumption by up to 40%

CONVENTIONAL FILLING
The solution tank can be filled by placing it directly under a faucet

QUICK-TAP DRIP-GUARD HOSE
For greater convenience, you can use the drip-guard hose to fill the tank. Being connected to the faucet, it prevents water from spilling

QUICK-DOSE MEASURING CAP
The built-in dispenser allows you to measure the correct amount of detergent

QUICK-CLIP SOLUTION TANK
The fresh water tank unhooks and re-hooks in a flash, for convenient filling or cleaning

QUICK-STAND TANKS
The possibility of placing the tanks on the ground while maintenance is carried out makes operations more comfortable

Daily maintenance is so quick that it is not a burden, it only takes a little to have V1 always in shape

QUICK-CLIP
RECOVERY TANK
The dirty water tank detaches and reattaches easily with the **QUICK-CLIP** system.
Its design ensures complete emptying and prevents residue that could cause mold and unpleasant odors.

Regular cleaning after use ensures optimal conditions for consistent performance and extends the lifespan of both individual parts and the entire machine.

Every part that needs cleaning can be removed and reattached without tools. In just a few minutes, your V1 will be ready and in shape for the next use.

FLOAT AND FILTER
The filter is easy to detach and clean. Regular cleaning helps keep consistent performance

QUICK-BRUSHES
Maintaining the brushes in good condition is essential for consistent cleaning performance. The **Brush Wear Indicator system** allows you to visually check the brush wear, so you know when it's time to replace them. Again, no tools are required for the replacement

SQUEEGEE CLEANING
The squeegee is quick and convenient to clean as it can be removed without tools. The blades can be removed just as easily, so that they can be turned and used on all 4 sides

BATTERY CHARGER
The external charger is extremely convenient, as it can be placed wherever it's most suitable for you, without worrying about the machine's bulk. Additionally, by purchasing two batteries you can charge one while using the other, ensuring that V1 is always ready for use

PRO PERFORMANCE IN A MINI SIZE

V1 can clean the same square meters as a conventional floor scrubber, delivering the same performance.
However, thanks to its ultra-compact size, it can reach areas where others cannot, cleaning up to 60% more surface area.

Mini FOOTPRINT

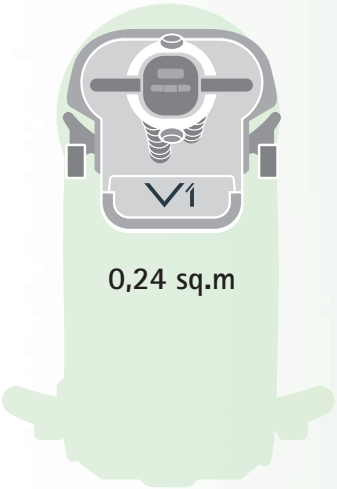

V1 provides the
SAME PERFORMANCE AND THE SAME POWER
as a conventional 50 cm scrubber dryer,
and more:

Up to
+60%
CLEANED SURFACE

-70%
SIZE

-80%
WEIGHT

Reduction in packaging, transport costs, and CO_2 emissions

-90%
WATER

Resource savings

-90%
of ENERGY for BATTERY CHARGING

It charges in just 2 hours with lithium batteries, compared to the 12 hours required for a floor scrubber with conventional batteries

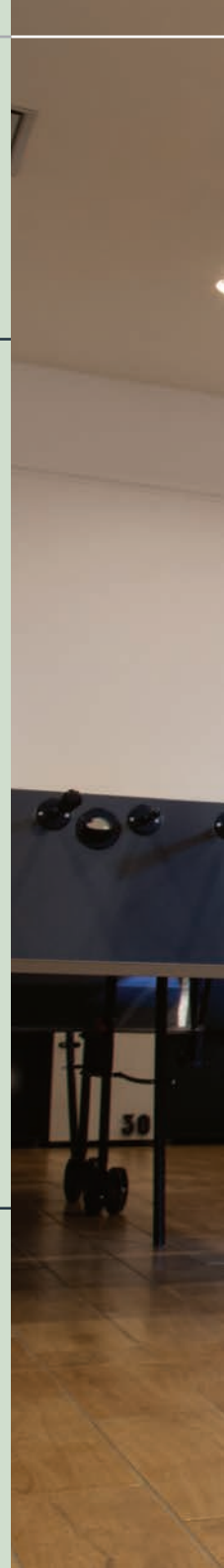

With V1, you increase the cleaning surface coverage, saving time and achieving a QUICK RETURN ON YOUR INITIAL INVESTMENT

In an environment such as an office, a conventional scrubber dryer cannot clean the entire floor area.

Tables and furniture block the passage, leaving much of the floor to be cleaned, often up to 50%.

V1, on the other hand, can clean along narrower passages and flexes to reach under tables,
covering up to 90 % of the usable area.

Batteries and battery chargers

Li-ion TECHNOLOGY

	BATTERIES Time to full charge	
	24 V / 15 Ah 9400555	24 V / 25 Ah 9400556
Battery charger 24V 10A* 9400557 EU	1h 30' (90')	-
Battery charger 24V 15A* 9400559 EU	-	1h 40' (100')

* Battery chargers are already supplied with their respective cables

CABLES AVAILABLE FOR CHARGERS

421360 EU

425678 UK

421359 US

452508 AU

452475 JP

452474 CN

Brushes and pads for any cleaning needs

V1 is a powerful and versatile machine able to perform any treatment on any type of floor.

The wide range of brushes and pads available can handle everything from the most difficult dirt to simple daily maintenance cleaning and polishing of delicate surfaces.

	CODE	DESCRIPTION	COLOUR	TYPE OF CLEANING
		DISC BRUSHES		
	9400151	SOFT BRUSH PPL 0,3	BLACK	Suitable for light and frequent cleaning of delicate hard and wooden floors such as marble and parquet.
	9400152	MEDIUM BRUSH PPL 0,45	LIGHT BLUE	Suited for daily and maintenance cleaning of all types of vinyl and hard floors. It is effective on PVC, linoleum, concrete or stone surfaces, even uneven or with grout lines. **Provided as standard.**
	9400153	HARD BRUSH PPL 0,6	WHITE	For heavy-duty and maintenance cleaning of hard floors, including linoleum, stone or tiles, even with uneven surfaces.
	9400154	NATURAL FIBRE BRUSH	GOLD	Suitable for vinyl and wooden floors for cleaning and polishing. It is effective on linoleum, PVC, resin, porcelain stoneware, wood, parquet, sports floors.
		ABRASIVE PADS Pads suited for ordinary and extraordinary cleaning of porcelain, tuff or microporous surfaces. For polishing resin or concrete floors. They are not for use on uneven or jointed floors.		
	9400158		WHITE	Soft pad for finishing wax/oiled surfaces and fine polishing.
	9400155		RED	Medium-soft pad for daily maintenance of any type of flooring and for polishing wax/oiled surfaces.
	9400156		GREEN	Medium-hard pad for maintenance and heavy-duty cleaning of resistant floors and for dewaxing.
	9400159		BROWN	Heavy duty pad for wet and dry scraping and for heavy-duty cleaning of resistant floors.
	9400157		BLACK	Hard pad for heavy duty cleaning of resistant floors with stubborn dirt and for dewaxing with chemicals.
		DIAMOND PADS Diamond pads are suited for polishing and sanding non-smooth surfaces as they remove dirt and damage caused by wear. For polishing and sanding, it is recommended to use the pads in progression from the coarsest to the lightest grit.		
	9400160	500 GRIT	LIGHT BLUE	It removes excess densifier leaving a matt finish, it also removes marks and small scratches from the surface.
	9400161	1000 GRIT	RED	Suited for a satin finish. It is recommended after using the Light Blue pad (500 grit).
	9400162	2000 GRIT	BEIGE	For a semi-gloss finish. It is recommended after using the Red pad (1000 grit).
	9400163	5000 GRIT	WHITE / BEIGE	For a gloss finish. It is recommended after using the Beige pad (2000 grit).
		MICROFIBRE PAD		
	9400164		WHITE	Suitable for frequent and maintenance cleaning, and for protective and polishing treatments of delicate, wooden and parquet floors. It is recommended after using the White/Beige pad (5000 grit).
		PAD HOLDERS		
	9400165	FOR ALL PADS		
	9400166	FOR MICROFIBRE PADS		

The information given in the table is for general purposes. For more detailed information on the brushes or pads to be used, please follow the floor manufacturer's specific recommendations.

TECHNICAL DATA		
Productivity	up to sqm/h	1380

SCRUBBING SYSTEM		
Working width	mm	460
Brush motors	(no.) V/W	(2) 24/310
Brush speed	rpm	350
Pressure on the brushes	up to kg	30

TANK AND RECOVERY SYSTEM		
Solution tank	l	5
Recovery tank	l	6
Suction motor	V/W	24/200

BATTERIES		
Supply / traction	V/Hz	24 / Semi aut.
Battery / Run time*	(no.) V/Ah / h	(1) Lithium 24/15 / 1h (60')
		(1) Lithium 24/25 / 2h (120')

SPECIFICATIONS		
Machine dimensions (L x h x w)	mm	505 x 1170 x 470
Squeegee width	mm	505
Machine weight empty without batteries	kg	24
Sound level (ISO 11201) - Eco	dB (A)	<70

* Run times are based on continuous scrubbing run times

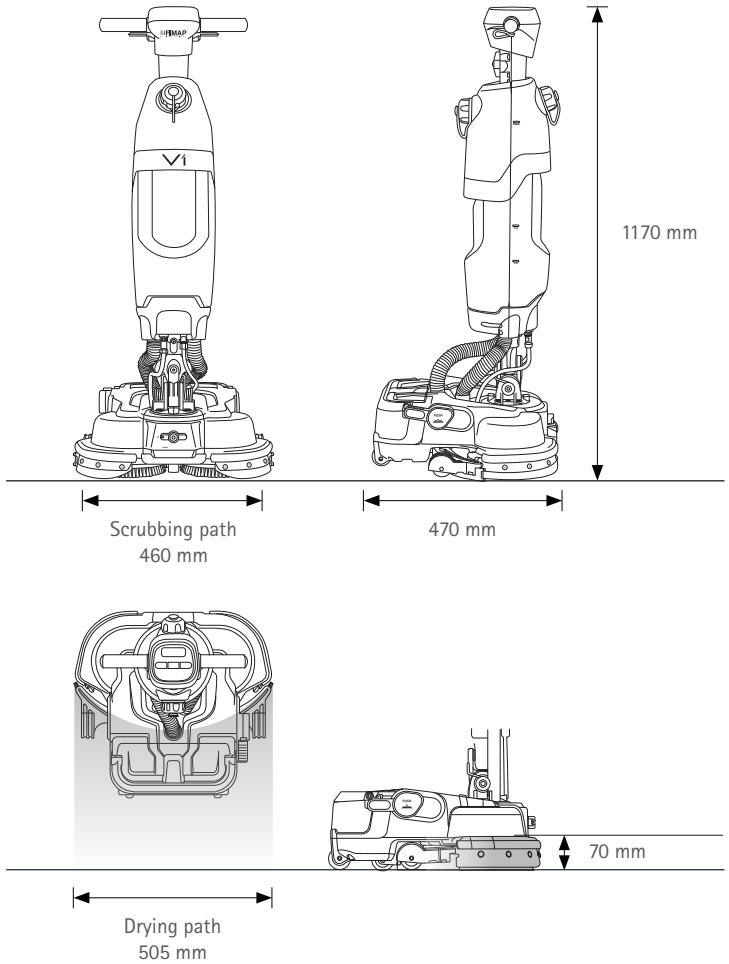

FIMAP
V1

For any additional information or for a demo please contact your usual Fimap dealer

FIMAP® by YOR INTERNATIONAL

www.fimap.com

FIMAP spa - Via Invalidi del Lavoro, 1 - 37059 S. Maria di Zevio - Verona - Italy - Tel. +39 045 6060411 - E-mail: contact@fimap.com

Fimap Spa reserves the right, at anytime, to make technical and/or equipment modifications without prior notification.
The images are shown as reference only and are not binding as to the actual design and/or equipment - Copyright © Fimap 2025 - COD. 93000013 - 03 - 04-2026